ITEM NO. 225250WP-KTG

2.2MM (FT TYPE)

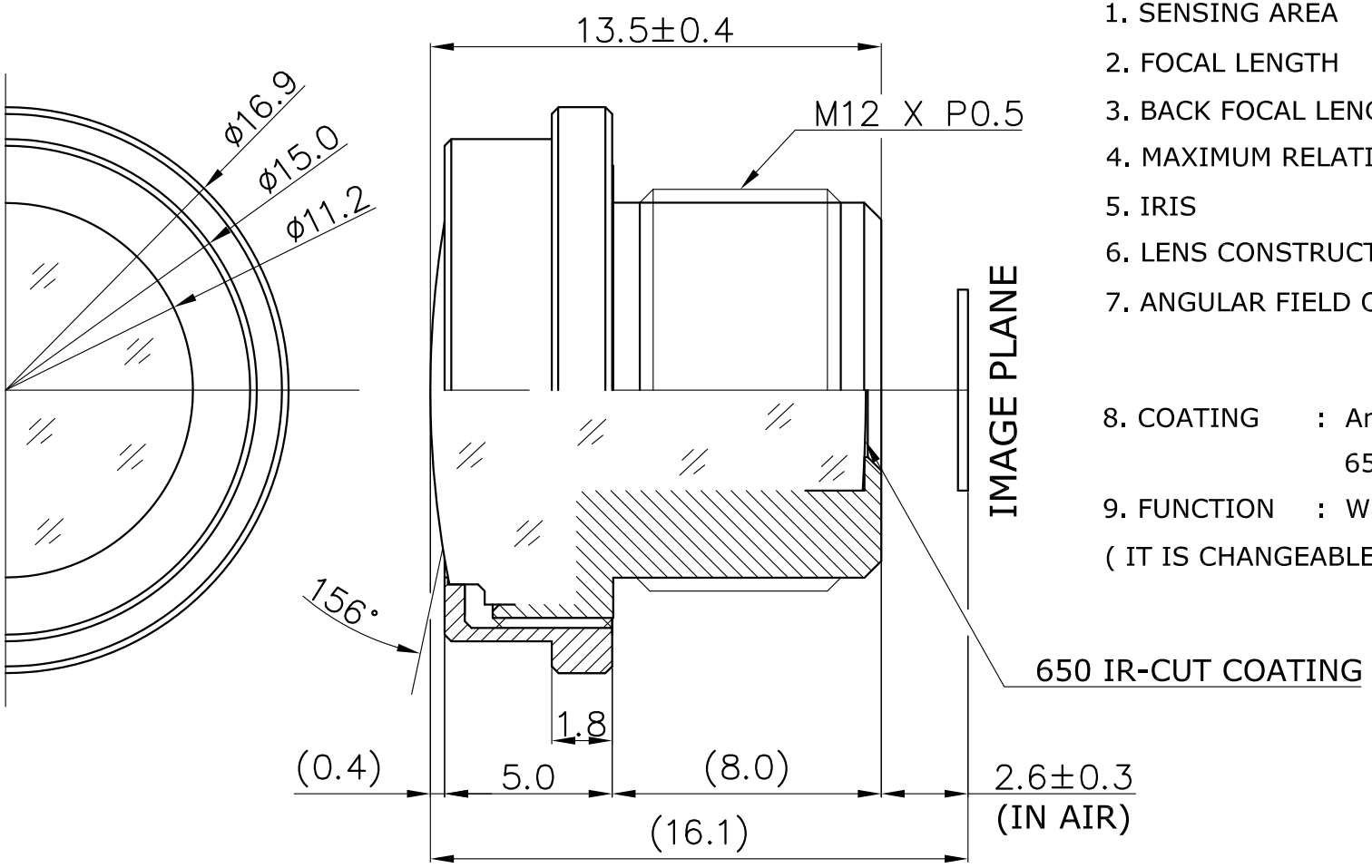

1. SENSING AREA : 1/4" CCD (3.6MMx2.7MM)
2. FOCAL LENGTH : 2.2MM ± 5%
3. BACK FOCAL LENGTH : 3.1MM ± 5% (IN AIR)
4. MAXIMUM RELATIVE APERTURE : 2.5 ± 5%
5. IRIS : FIXED
6. LENS CONSTRUCTION : 5COMPONENTS 5ELEMENTS
7. ANGULAR FIELD OF VIEW : DIAGONAL 156.0°
   HORIZONTAL 108.0°
   VERTICAL 78.0°
8. COATING : Anti-fog Coating & HARD Coating
   650nm IR-CUT COATING
9. FUNCTION : Waterproof Lens

(IT IS CHANGEABLE ON EXTERNAL DIMENSION BY
BY CUSTOMER'S REQUIREMENT.)

E-mail : hki9612@hkopto.com
Website : http://hkopto.com

HK HANKWANG OPTO	TOLERANCES	Designed	E Y .KIM	Title	f=2.2mm F/2.5 1/4" CCD Waterproof Automotive Lens		
	ANGLE 1°/2 X. ± 0.2 .X ± 0.1 .XX ± 0.05	Checked	J H .PARK				
		Approved					
A4	Scale N/S	Dwg No.	HK-A225S(WP)	DATE	2019.01.14	REVISION NO. -00	