ITEM NO. 3504200K

35.0MM (K TYPE)

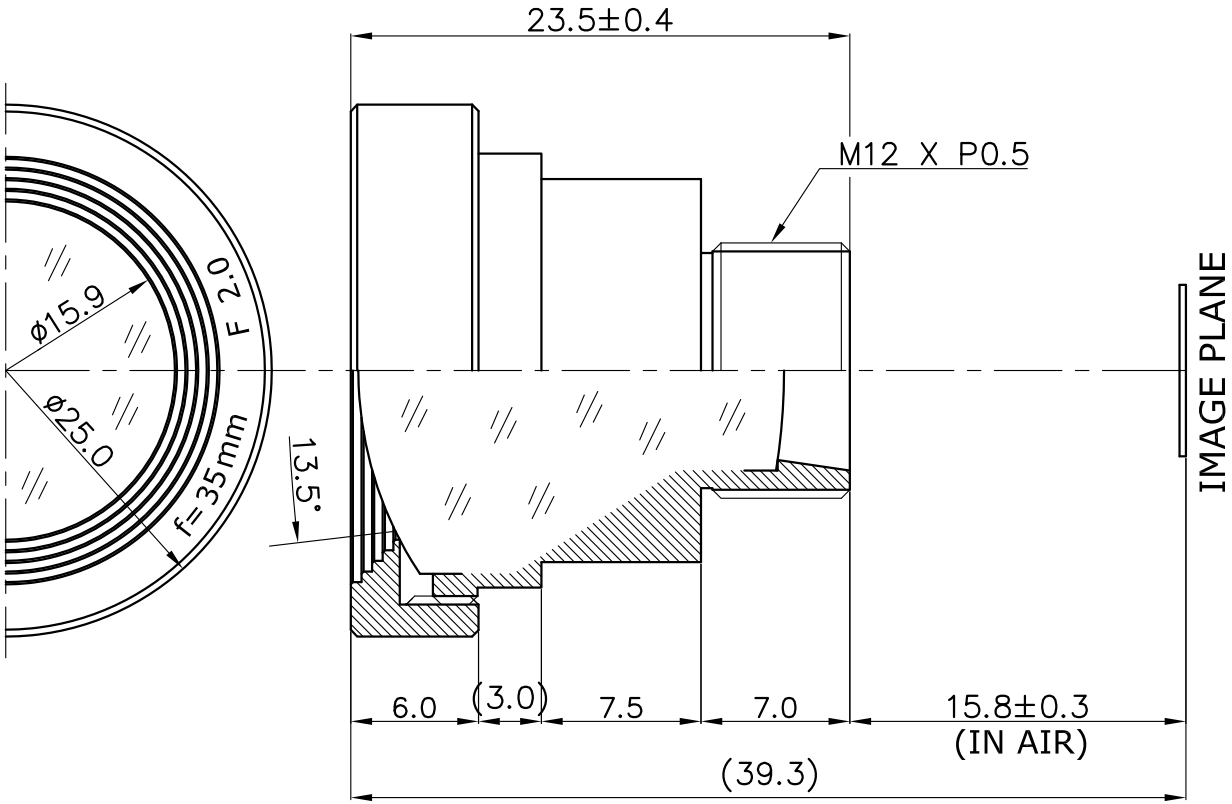

1. SENSING AREA : 1/2" & 1/3" CCD
2. FOCAL LENGTH : 35.0MM ± 5%
3. BACK FOCAL LENGTH : 18.9MM ± 5% (IN AIR)
4. MAXIMUM RELATIVE APERTURE : 2.0 ± 5%
5. IRIS : WITHOUT DIAPHRAGM
6. LENS CONSTRUCTION : 4COMPONENTS 4ELEMENTS
7. ANGULAR FIELD OF VIEW :

	1/2"	& 1/3"
DIAGONAL	13.0°	9.8°
HORIZONTAL	9.8°	7.3°
VERTICAL	7.2°	5.4°

8. MINIMUM OBJECT DISTANCE : 20 CM -00
9. WEIGHT : 15.4gr

(IT IS CHANGEABLE ON EXTERNAL DIMENSION BY BY CUSTOMER'S REQUIREMENT.)

E-mail : hki9612@hkopto.com
Website : http://hkopto.com

HK HANKWANG OPTO	TOLERANCES	Designed	E Y .KIM	Title	B/W & COLOR f=35.0MM Fno 2.0		
	ANGLE 1°/2	Checked	J H .PARK				
	X. ± 0.2						
	.X ± 0.1	Approved					
	.XX ± 0.05						
A4	Scale N/S	Dwg No.	HK-V3504S	DATE	2019.01.02	REVISION NO. -00	