ITEM NO. 1603200K

16.0MM (K TYPE)

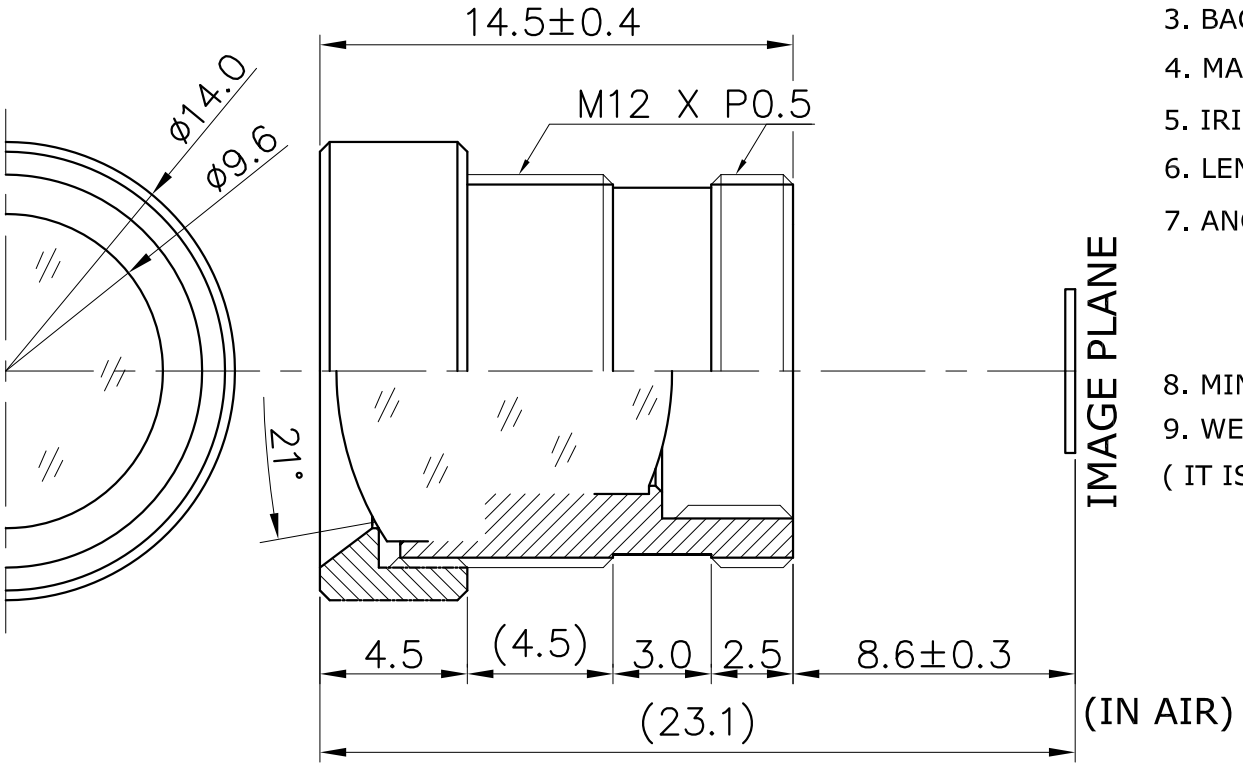

1. SENSING AREA : 1/3" & 1/4" CCD
2. FOCAL LENGTH : 16.0MM ± 5%
3. BACK FOCAL LENGTH : 12.3MM ± 5% (IN AIR)
4. MAXIMUM RELATIVE APERTURE : 2.0 ± 5%
5. IRIS : FIXED
6. LENS CONSTRUCTION : 3COMPONENTS 3ELEMENTS
7. ANGULAR FIELD OF VIEW :

	1/3"	& 1/4"
DIAGONAL	21.0°	15.8°
HORIZONTAL	16.6°	12.4°
VERTICAL	12.4°	9.3°

8. MINIMUM OBJECT DISTANCE : 80 CM -00
9. WEIGHT : 4.2gr

(IT IS CHANGEABLE ON EXTERNAL DIMENSION BY BY CUSTOMER'S REQUIREMENT.)

E-mail : hki9612@hkopto.com
Website : http://www.hkopto.com

HK HANKWANG OPTO	TOLERANCES	Designed	BANG HYE SUN	Title	FOR B/W & COLOR f=16.0MM Fno 2.0		
	ANGLE 1°/2	Checked	PARK JIN HYUN				
	X. ± 0.2						
	.X ± 0.1	Approved					
	.XX ± 0.05						
A4	Scale N/S	Dwg No.	HK-V1603S	DATE	250118	REVISION NO. -00	