ITEM NO. 654200K

6.0MM (K TYPE)

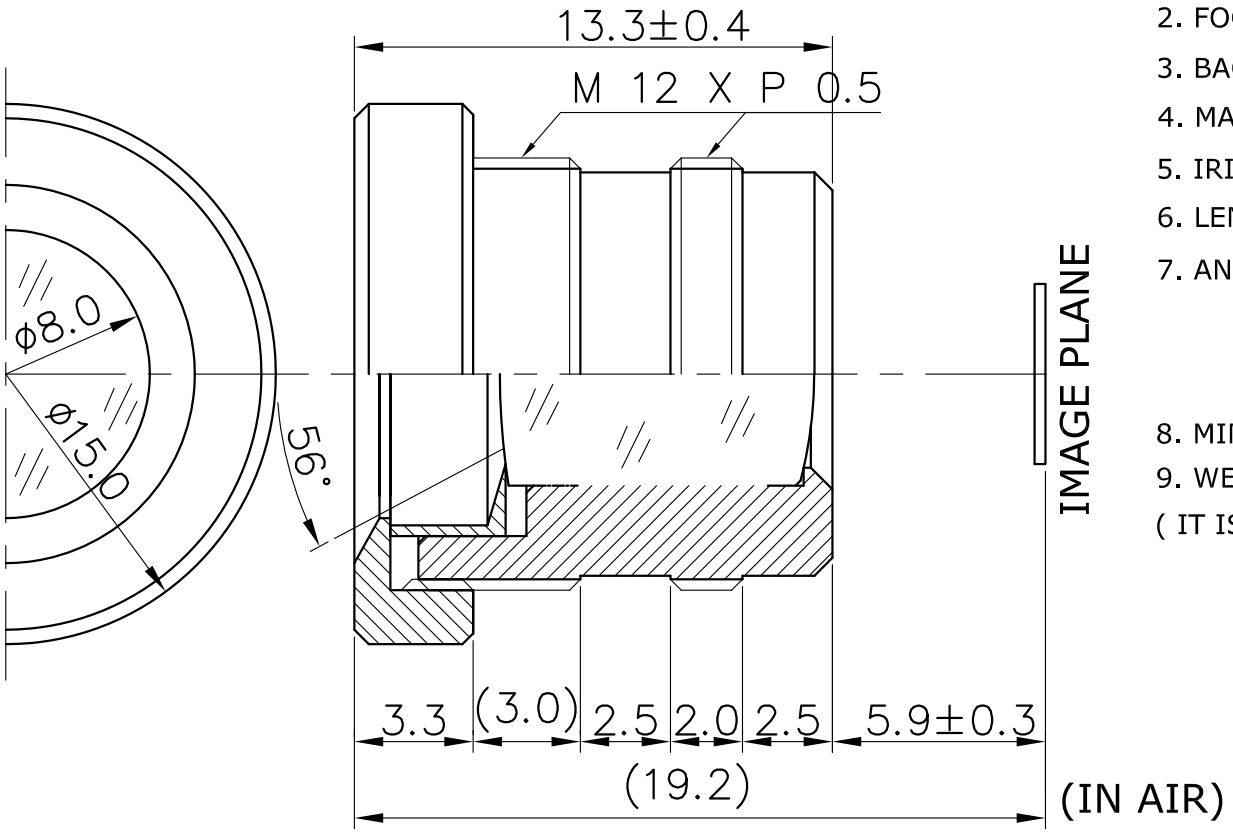

1. SENSING AREA : 1/3" & 1/4" CCD
2. FOCAL LENGTH : 6.5MM ± 5%
3. BACK FOCAL LENGTH : 6.4MM ± 5% (IN AIR)
4. MAXIMUM RELATIVE APERTURE : 2.0± 5%
5. IRIS : FIXED
6. LENS CONSTRUCTION : 4COMPONENTS 4ELEMENTS
7. ANGULAR FIELD OF VIEW :

	1/3"	& 1/4"
DIAGONAL	56.0°	41.6°
HORIZONTAL	44.8°	29.9°
VERTICAL	33.0°	24.8°

8. MINIMUM OBJECT DISTANCE : 40 CM -00
9. WEIGHT : 4.4gr

(IT IS CHANGEABLE ON EXTERNAL DIMENSION BY BY CUSTOMER'S REQUIREMENT.)

E-mail : hki9612@hkopto.com
Website : http://hkopto.com

HK HANKWANG OPTO	TOLERANCES	Designed	BANG HYE SUN	Title	FOR B/W & COLOR f=6.5MM Fno 2.0		
	ANGLE 1°/2	Checked	PARK JIN HYUN				
	X. ± 0.2						
	.X ± 0.1	Approved					
	.XX ± 0.05						
A4	Scale N/S	Dwg No.	HK-V654S	DATE	2019.01.07	REVISION NO. -00	