ITEM NO. 226250K

2.2MM (K TYPE)

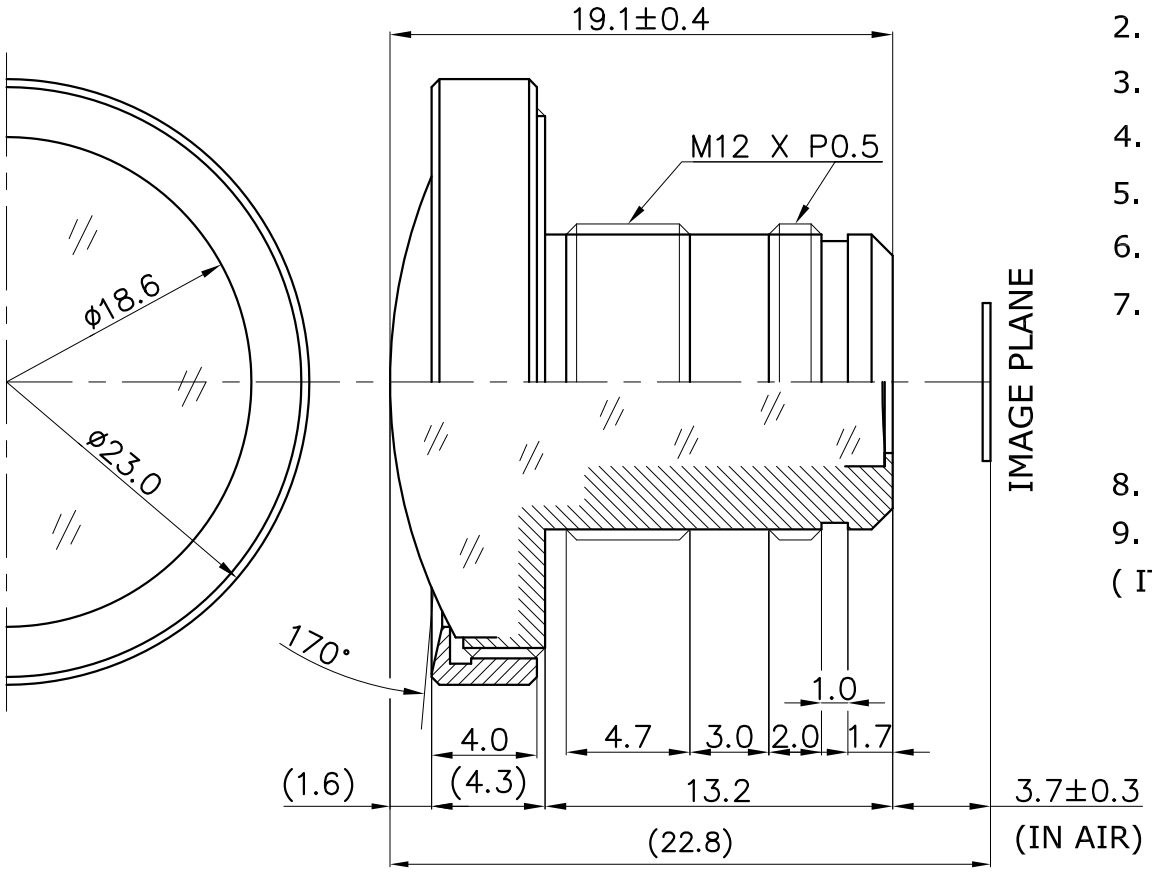

1. SENSING AREA : 1/3" & 1/4" CCD
2. FOCAL LENGTH : 2.2MM ± 5%
3. BACK FOCAL LENGTH : 4.2MM ± 5% (IN AIR)
4. MAXIMUM RELATIVE APERTURE : 2.5 ± 5%
5. IRIS : FIXED
6. LENS CONSTRUCTION : 6COMPONENTS 6ELEMENTS
7. ANGULAR FIELD OF VIEW :

	1/3"	&	1/4"
DIAGONAL	170°		124°
HORIZONTAL	131°		96°
VERTICAL	96°		74°

8. MINIMUM OBJECT DISTANCE : 40 CM -00
9. WEIGHT : 6.5gr

(IT IS CHANGEABLE ON EXTERNAL DIMENSION BY BY CUSTOMER'S REQUIREMENT.)

E-mail : hki9612@hkopto.com
Website : http://www.hkopto.com

HK HANKWANG OPTO	TOLERANCES	Designed	BANG HYE SUN	Title	FOR B/W & COLOR f=2.2MM Fno 2.5		
	ANGLE 1°/2	Checked	PARK JIN HYUN				
	X. ± 0.2						
	.X ± 0.1	Approved					
	.XX ± 0.05						
A4	Scale N/S	Dwg No.	HK-V226S	DATE	210628	REVISION NO. -00	