ITEM NO. 434180HR

4.3MM (K TYPE)

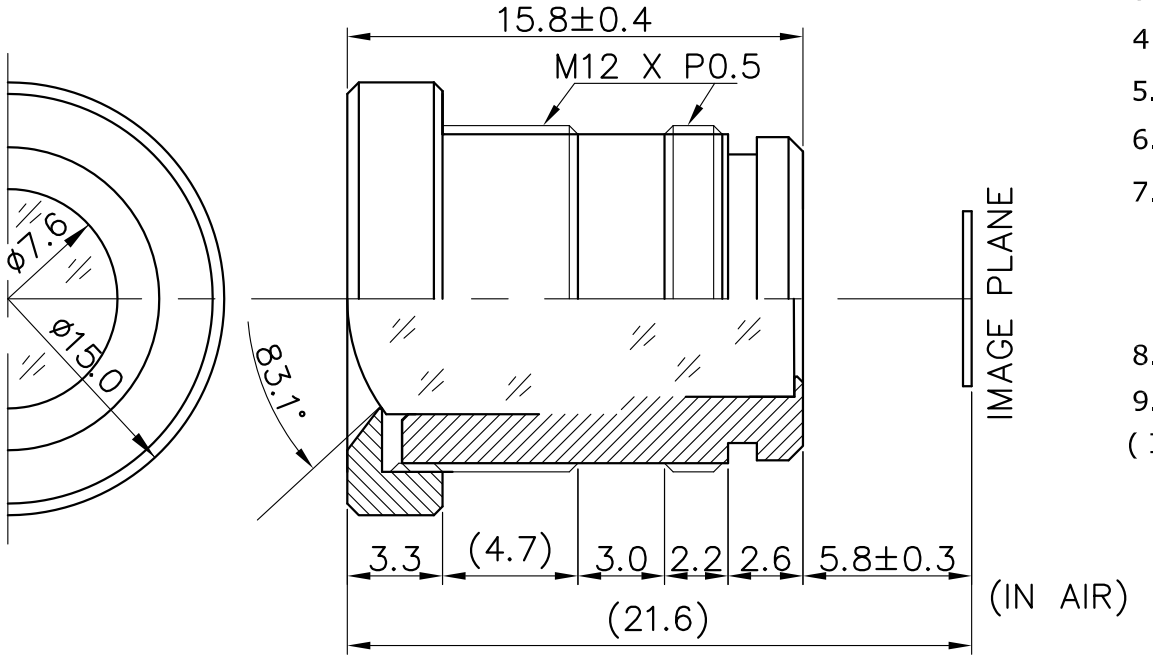

1. SENSING AREA : 1/3" CCD & (1/4"CCD)
2. FOCAL LENGTH : 4.3MM ± 5%
3. BACK FOCAL LENGTH : 6.16MM ± 5% (IN AIR)
4. MAXIMUM RELATIVE APERTURE : 1.8± 5%
5. IRIS : WITHOUT DIAPHRAGM
6. LENS CONSTRUCTION : 4COMPONENTS 4ELEMENTS
7. ANGULAR FIELD OF VIEW :

	1/3" &	(1/4")
DIAGONAL	83.1° &	61.1°
HORIZONTAL	73.7° &	49.2°
VERTICAL	47.3° &	36.0°

8. MINIMUM OBJECT DISTANCE : 30CM -00
9. WEIGHT : 4.0gr

(IT IS CHANGEABLE ON EXTERNAL DIMENSION BY BY CUSTOMER'S REQUIREMENT.)

E-mail : hki9612@hkopto.com
Website : http://hkopto.com

HK HANKWANG OPTO	TOLERANCES	Designed	BANG HYE SUN	Title	FOR B/W & COLOR f=4.3MM Fno 1.8 (HIGH RESOLUTION)		
	ANGLE 1°/2	Checked	PARK JIN HYUN				
	X. ± 0.2						
	.X ± 0.1	Approved					
	.XX ± 0.05						
A4	Scale N/S	Dwg No.	HK-R434S	DATE	2019.01.08	REVISION NO. -00	